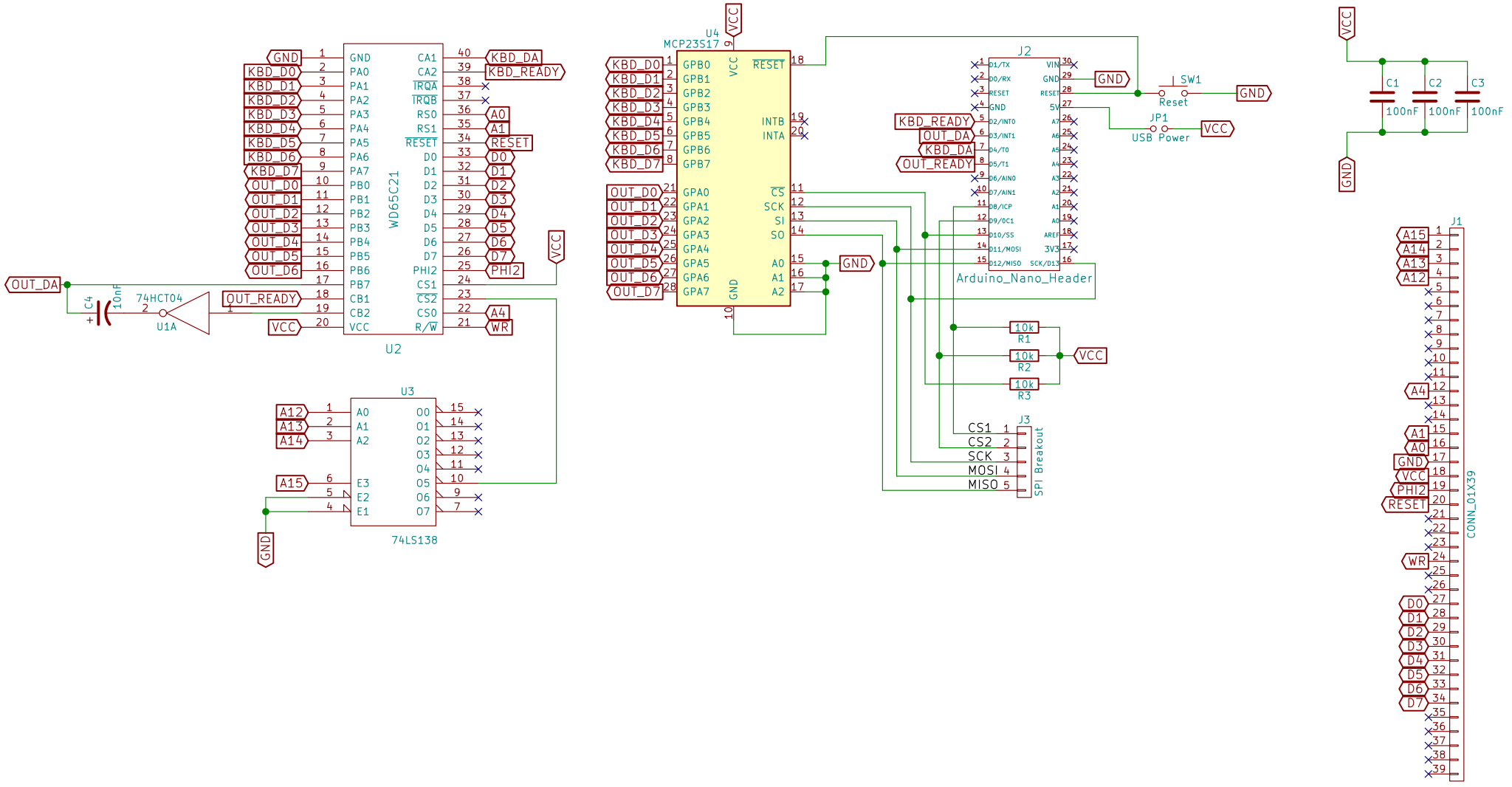

Sheet: /
File: RC6502 Serial IO.sch

Title: RC6502 Serial IO

Size: A4	Date:	Rev: A
KiCad E.D.A. kicad 4.0.6		Id: 1/1