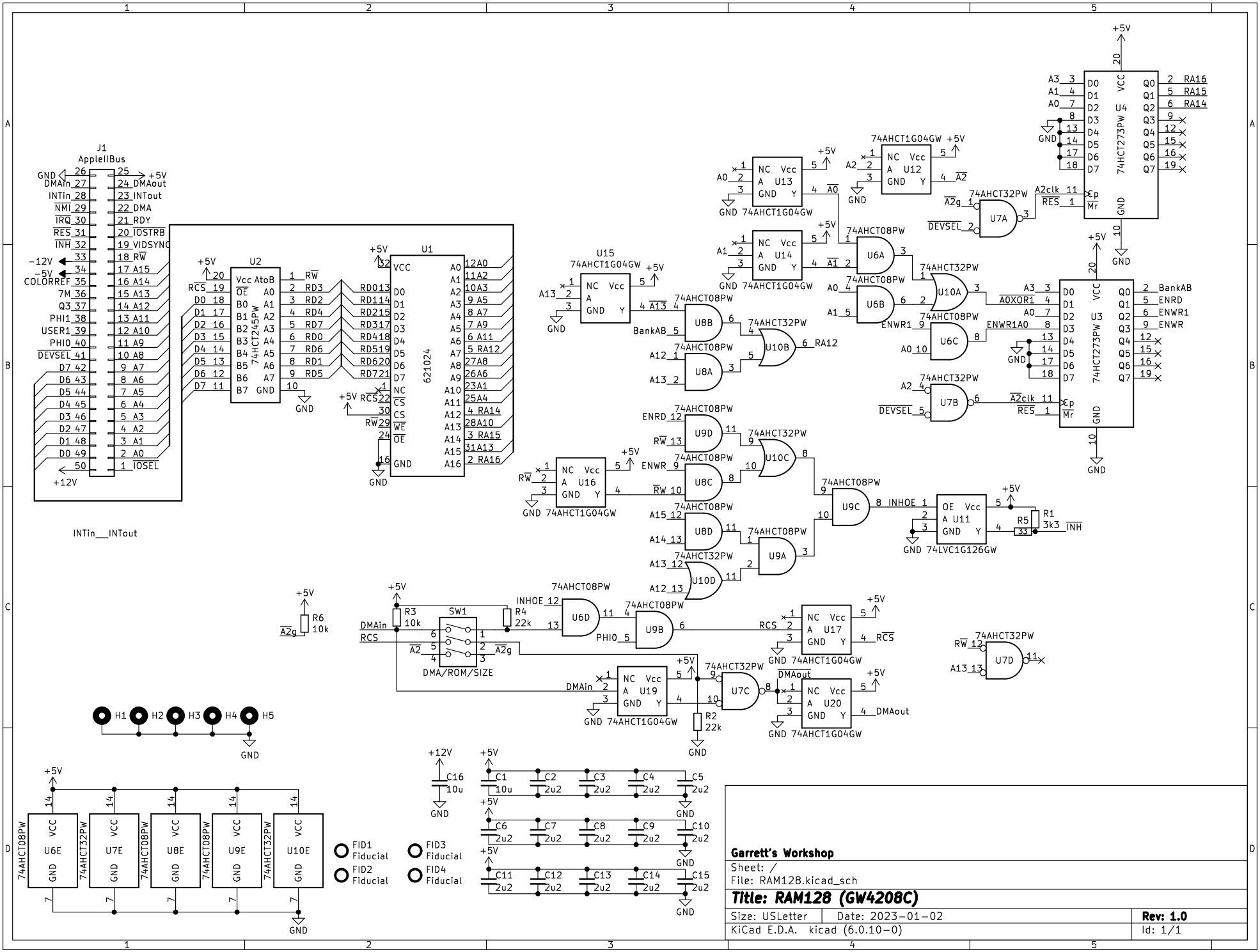

Garrett's Workshop

Sheet: /

File: RAM128.kicad_sch

Title: RAM128 (GW4208C)

Size: USLetter	Date: 2023-01-02	**Rev: 1.0**
KiCad E.D.A. kicad (6.0.10-0)		Id: 1/1