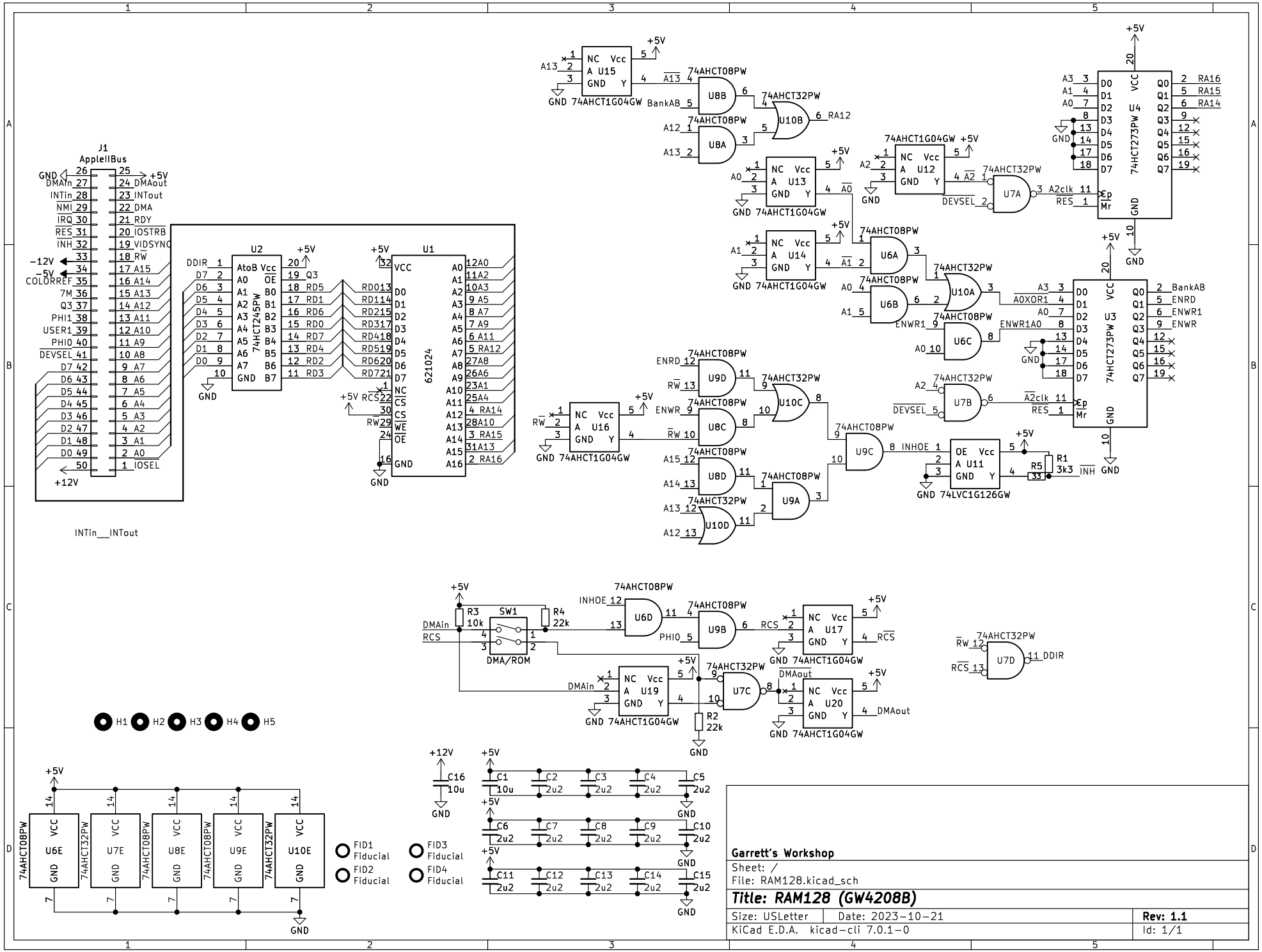

Garrett's Workshop

Sheet: /

File: RAM128.kicad_sch

Title: RAM128 (GW4208B)

Size: USLetter	Date: 2023-10-21	Rev: 1.1
KiCad E.D.A. kicad-cli 7.0.1-0		Id: 1/1