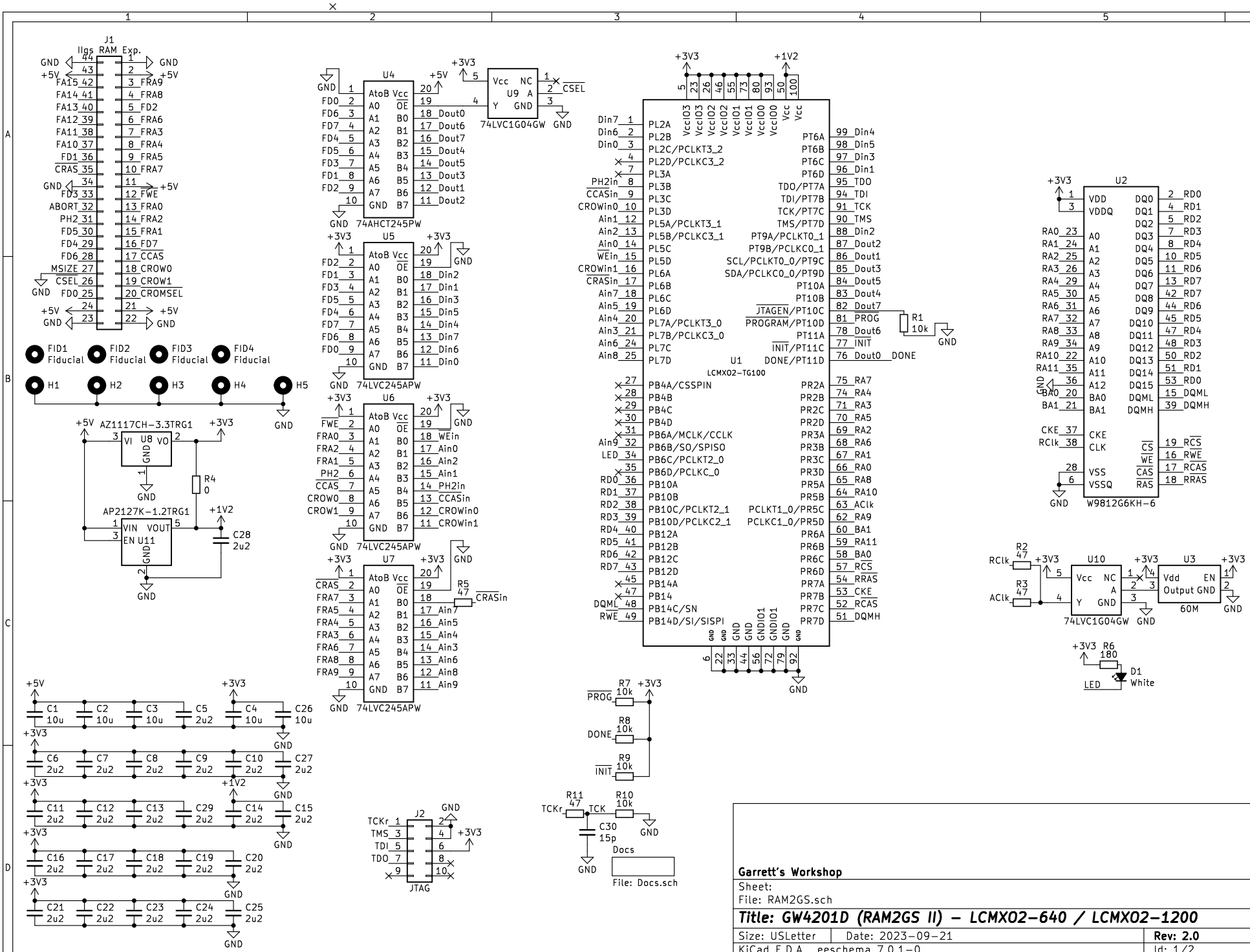
J1
Ilgs RAM Exp.
FA15 FA14 FA13 FA12 FA11 FA10 FD1 CRAS FD3 ABORT PH2 FD5 FD4 FD6 MSIZE CSEL FD0
FRA9 FRA8 FD2 FRA6 FRA3 FRA4 FRA5 FRA7 FWE FRA0 FRA2 FRA1 FD7 CCAS CROW0 CROW1 CROMSEL
FID1 Fiducial
FID2 Fiducial
FID3 Fiducial
FID4 Fiducial
H1 H2 H3 H4 H5
AZ1117CH-3.3TRG1
U8
R4 0
AP2127K-1.2TRG1
U11
C28 2u2
U4
74AHCT245PW
74LVC1G04GW
U9
CSEL
U5
74LVC245APW
U6
74LVC245APW
U7
74LVC245APW
R5 47
CRASin
U1
LCMXO2-TG100
R1 10k
U2
W9812G6KH-6
R2 47
R3 47
U10
74LVC1G04GW
U3
60M
R6 180
D1 White
LED
R7 10k
R8 10k
R9 10k
PROG
DONE
INIT
R11 47
R10 10k
C30 15p
TCKr
TCK
J2
JTAG
Docs
File: Docs.sch
Garrett's Workshop
Sheet:
File: RAM2GS.sch
Title: GW4201D (RAM2GS II) – LCMXO2-640 / LCMXO2-1200
Size: USLetter
Date: 2023-09-21
Rev: 2.0
KiCad E.D.A. eeschema 7.0.1-0
Id: 1/2

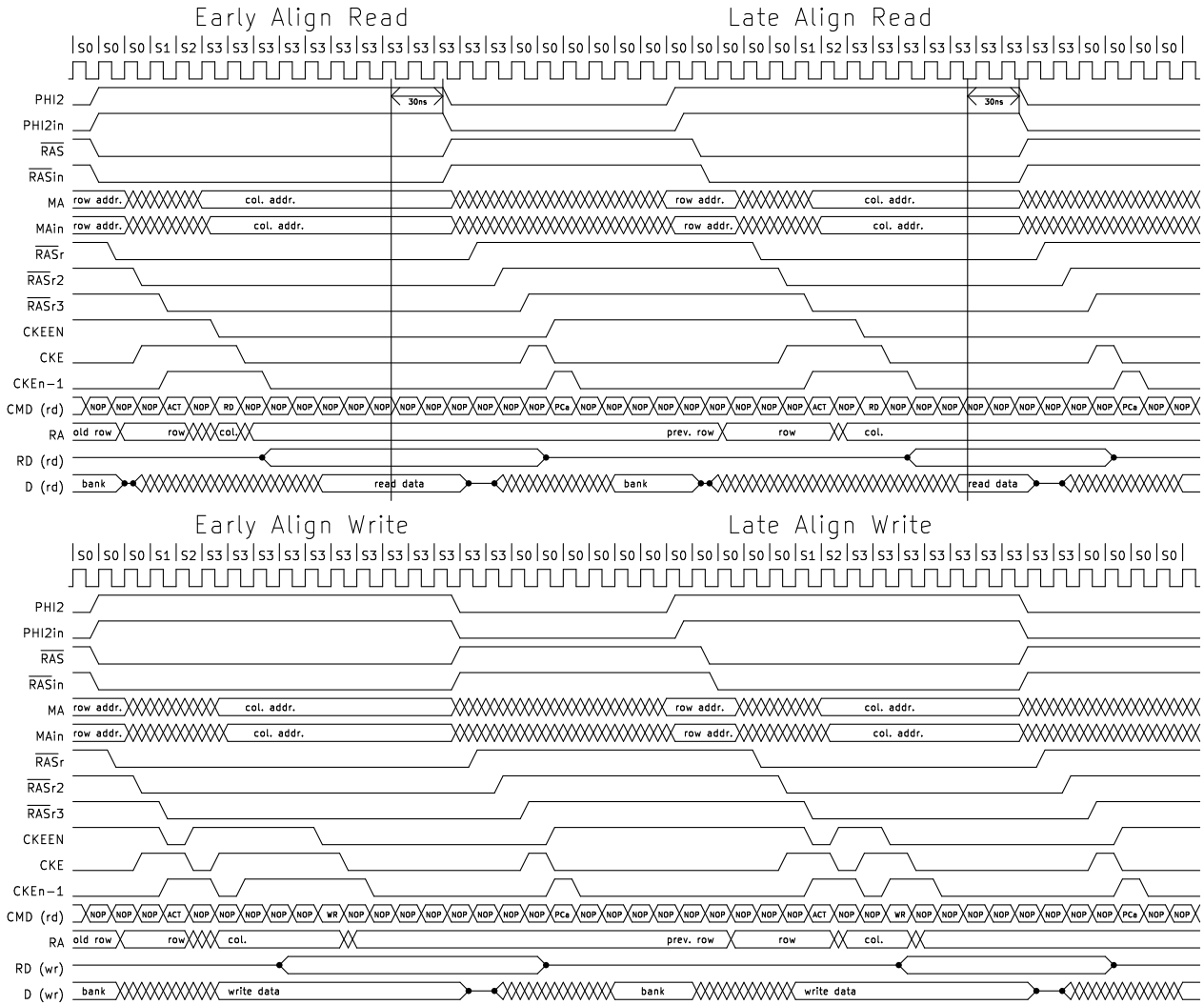

Garrett's Workshop

Sheet:
File: Docs.sch

Title: GW4201D (RAM2GS II) – LCMXO2-640 / LCMXO2-1200

Size: A4	Date: 2023-09-21	**Rev: 2.0**
KiCad E.D.A. eeschema 7.0.1-0		Id: 2/2