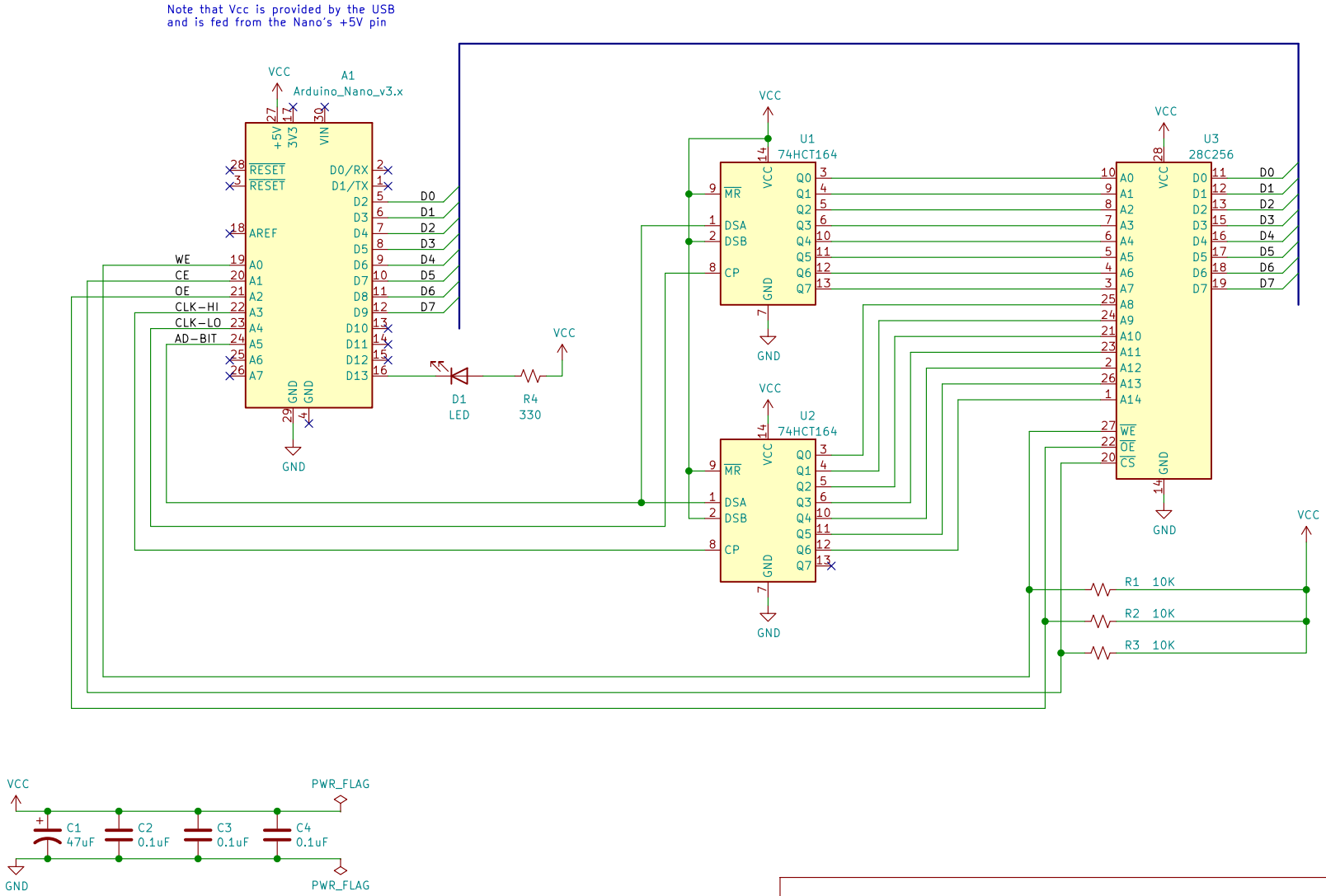

github.com/TomNisbet

Sheet: /

File: TommyPROM-schematics.sch

Title: TommyPROM 28C Nano

Size: USLetter	Date: 2021-04-30	**Rev: 1.1**
KiCad E.D.A. kicad (5.1.9)-1		Id: 1/1