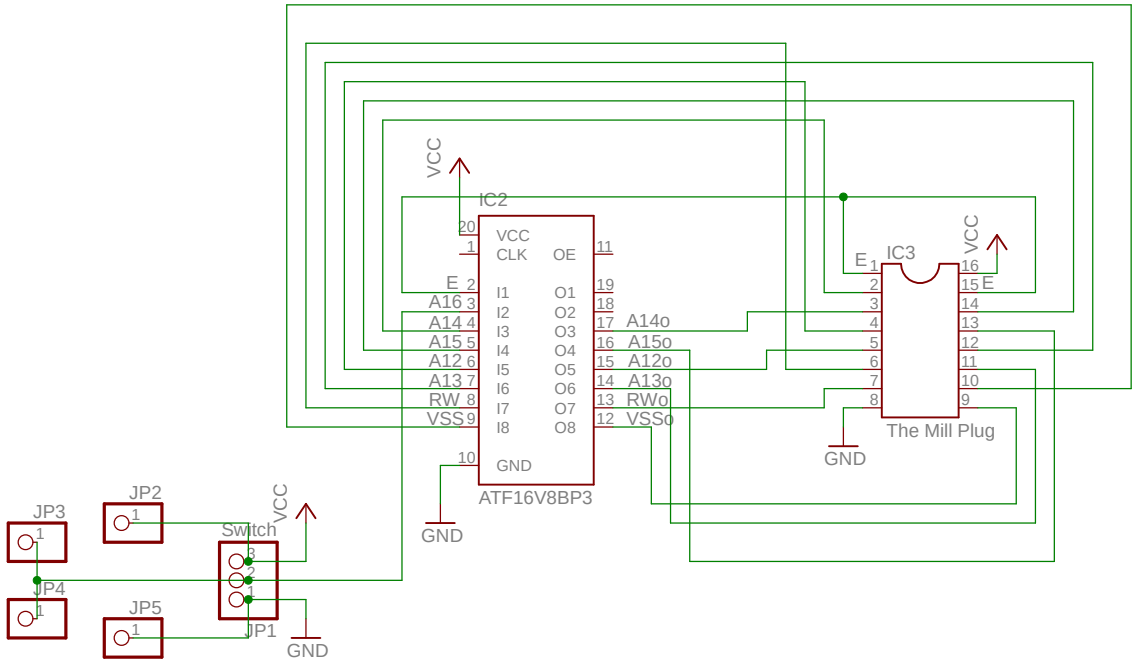

16/01/2017 17:44:31 C:\Users\Luca\Documents\eagle\The_Mill_2\The_Mill\the_mill.sch (Sheet: 1/1)