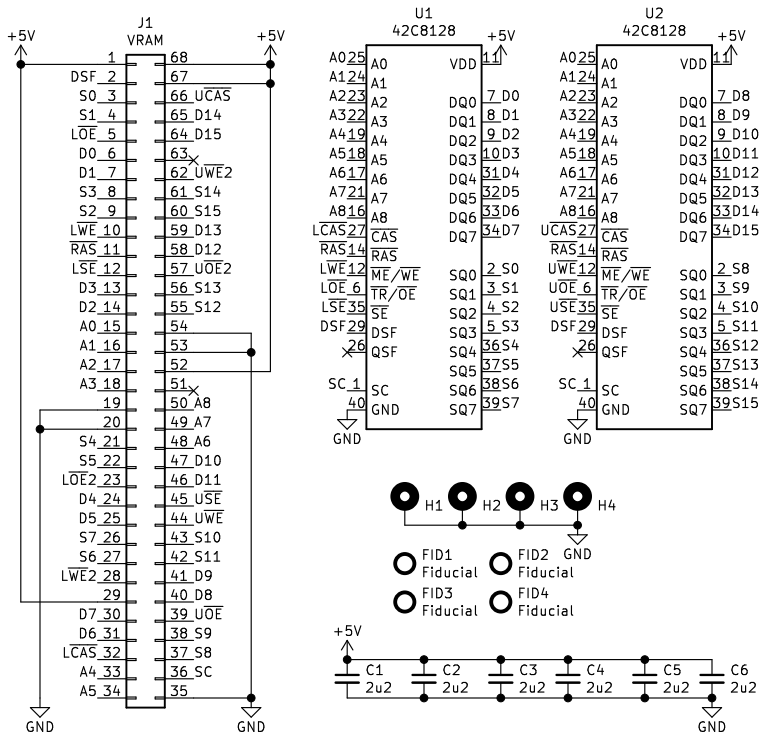

Garrett's Workshop

Sheet: /

File: MacVRAMSIMM.sch

Title: GW4404A

Size: USLetter	Date: 2021-05-30	**Rev: 1.0**
KiCad E.D.A. kicad (5.1.10-1-10_14)		Id: 1/1